Heavy Truck

HT100 – HT180

Capacity 10000 – 18000 kg | Series 1411

Extra strong long-distance runner

→ Powerful drive ensures maximum handling performance
→ Ergonomic driver's cabin ensures fatigue-free operation
→ Mast and counterweight provide a clear view of load and surroundings
→ Optimum all-round visibility increases safety
→ Robust construction provides for long maintenance intervals

TECHNICAL DATA (According to VDI 2198)

Characteristics	1.1	Manufacturer		Linde		Linde		Linde		Linde	
	1.2	**Model**		**HT100/600**		**HT120/600**		**HT140/600**		**HT150/600**	
	1.2a	Series		1411-02		1411-02		1411-02		1411-02	
	1.3	Power unit		Diesel		Diesel		Diesel		Diesel	
	1.4	Operation		Seat		Seat		Seat		Seat	
	1.5	Load capacity/Load	Q (t)	10.0		12.0		14.0		15.0	
	1.6	Load centre distance	c (mm)	600		600		600		600	
	1.8	Axle centre to fork face	x (mm)	847		847		884		884	
	1.9	Wheelbase	y (mm)	3000		3000		3000		3250	
Weights	2.1	Service weight	(kg)	16298		16453		19081		19253	
	2.2	Axle load with load, front/rear	(kg)	23150/3148		26163/2290		30495/2586		31500/2753	
	2.3	Axle load without load, front/ rear	(kg)	8327/7971		8375/8078		9570/9511		9651/9602	
Wheels/Tyres	3.1	Tyres rubber, SE, pneumatic, polyurethane		Pneumatic		Pneumatic		Pneumatic		Pneumatic	
	3.2	Tyre size, front		10.00 - 20/16 PR		10.00 - 20/16 PR		12.00 - 20/20 PR		12.00-20/20PR	
	3.3	Tyre size, rear		10.00 - 20/16 PR		10.00 - 20/16 PR		12.00 - 20/20 PR		12.00-20/20PR	
	3.5	Wheels, number front/rear (x = driven)		4x/2		4x/2		4x/2		4x/2	
	3.6	Track width, front	b10 (mm)	1874		1874		1874		1874	
	3.7	Track width, rear	b11 (mm)	1970		1970		1970		1970	
Dimensions	4.1	Mast/fork carriage tilt, forward/backward	a/b (°)	15.0/10.0 [1]		15.0/10.0 [1]		15.0/10.0 [1]		15.0/10.0 [1]	
	4.2	Height of mast, lowered	h1 (mm)	3404 [2]		3404 [2]		3736 [2]		3736 [2]	
	4.3	Free lift	h2 (mm)	150		150		150		150	
	4.4	Lift	h3 (mm)	4000		4000		4000		4000	
	4.5	Height of mast, extended	h4 (mm)	5329		5329		5661		5661	
	4.7	Height of overhead guard (cabin)	h6 (mm)	3010		3010		3035		3035	
	4.8	Height of seat/stand on platform	h7 (mm)	1974		1974		2004		2004	
	4.12	Towing coupling height	h10 (mm)	550		550		580		580	
	4.19	Overall length	l1 (mm)	5984		5984		6066		6316	
	4.20	Length to fork face	l2 (mm)	4584		4584		4666		4916	
	4.21	Overall width	b1/b2 (mm)	2530/2300		2530/2300		2565/2300		2565/2300	
	4.22	Fork dimensions	s/e/l (mm)	90 × 200 × 1400		90 × 200 × 1400		100 × 200 × 1400		100 × 200 × 1400	
	4.23	Fork carriage to ISO 2328, class/type A, B		Hyd Fork Posn.		Hyd Fork Posn.		Hyd Fork Posn.		Hyd Fork Posn.	
	4.24	Width of fork carriage	b3 (mm)	2545		2545		2545		2545	
	4.25	Fork spread	b5 (mm)	610/2274		610/2274		620/2220		620/2220	
	4.31	Ground clearance, below mast	m1 (mm)	172		172		200		200	
	4.32	Ground clearance, centre of wheelbase	m2 (mm)	346		346		376		376	
	4.35	Turning radius	Wa (mm)	4102		4102		4102		4338	
	4.36	Minimum pivoting point distance	b13 (mm)	1362		1362		1362		1405	
Performance	5.1	Travel speed, with/without load	(km/h)	27.9/29.1		27.6/29.1		28.3/30.2		28.3/30.2	
	5.2	Lifting speed, with/without load	(m/s)	0.4/0.42		0.4/0.42		0.37/0.4		0.4/0.42	
	5.3	Lowering speed, with/without load	(m/s)	0.45/0.4		0.45/0.4		0.42/0.38		0.45/0.4	
	5.5	Tractive force, with/without load	(N)	98500/100500		98300/100600		92800/95500		103000/105900	
	5.7	Climbing ability, with/without load	(%)	41.3/80.8		37.6/79.7		29.8/59.3		32.2/67.7	
	5.9	Acceleration time, with/without load	(s)	-		-		-		-	
	5.10	Service brake		Wet disc		Wet disc		Wet disc		Wet disc	
Drive	7.1	Engine manufacturer/type		Mercedes-Benz OM934	Cummins QSB 6.7	Mercedes-Benz OM934	Cummins QSB 6.7	Mercedes-Benz OM934	Cummins QSB 6.7	Mercedes-Benz OM934	Cummins QSB 6.7
	7.2	Engine performance according to ISO 1585	(kW)	129	129 kW (149 kW)	129	129 kW (149 kW)	129	129 kW (149 kW)	150	129 kW (149 kW)
	7.3	Rated speed	(1/min)	2200	2200	2200	2200	2200	2200	2200	2200
	7.4	Number of cylinders/displacement	(-/cm³)	4/5100	6/6700	4/5100	6/6700	4/5100	6/6700	4/5100	6/6700
	7.5	Fuel consumption according to VDI cycle	(l/h)	-	-	-	-	-	-	-	-
Others	8.1	Type of drive unit		Torque conv. 3/3		Torque conv. 3/3		Torque conv. 3/3		Torque conv. 3/3	
	10.1	Operating pressure for attachments	(bar)	250		250		250		250	
	10.2	Oil flow for attachments	(l/min)	5 – 130		5 – 130		5 – 130		5 – 130	
	10.7	Sound pressure level LpAZ (at the driver's seat)	(dB(A))	70		70		70		70	
	10.8	Towing coupling, design/type, DIN 15 170		Ø 50 mm		Ø 50 mm		Ø 50 mm		Ø 50 mm	

TECHNICAL DATA (According to VDI 2198)

Characteristics	1.1	Manufacturer		Linde		Linde		Linde		Linde	
	1.2	**Model**		**HT160/600**		**HT180/600**		**HT180/900**		**HT100/1200**	
	1.2a	Series		1411-02		1411-02		1411-02		1411-02	
	1.3	Power unit		Diesel		Diesel		Diesel		Diesel	
	1.4	Operation		Seat		Seat		Seat		Seat	
	1.5	Load capacity/Load	Q (t)	16.0		18.0		18.0		10.0	
	1.6	Load centre distance	c (mm)	600		600		900		1200	
	1.8	Axle centre to fork face	x (mm)	884		884		929		884	
	1.9	Wheelbase	y (mm)	3250		3250		3500		3000	
Weights	2.1	Service weight	(kg)	19720		22113		22786		19274	
	2.2	Axle load with load, front/rear	(kg)	32935/2785		36613/3500		37830/2956		27088/2186	
	2.3	Axle load without load, front/ rear	(kg)	9629/10091		10394/11719		10424/12362		10141/9133	
Wheels/Tyres	3.1	Tyres rubber, SE, pneumatic, polyurethane		Pneumatic		Pneumatic		Pneumatic		Pneumatic	
	3.2	Tyre size, front		12.00 - 20/20 PR		12.00 - 20/20 PR		12.00 - 20/20 PR		12.00 - 20/20 PR	
	3.3	Tyre size, rear		12.00 - 20/20 PR		12.00 - 20/20 PR		12.00 - 20/20 PR		12.00 - 20/20 PR	
	3.5	Wheels, number front/rear (x = driven)		4x/2		4x/2		4x/2		4x/2	
	3.6	Track width, front	b10 (mm)	1874		1874		1874		1874	
	3.7	Track width, rear	b11 (mm)	1970		1970		1970		1970	
Dimensions	4.1	Mast/fork carriage tilt, forward/backward	a/b (°)	15.0/10.0 [1]		15.0/10.0 [1]		15.0/10.0 [1]		15.0/10.0 [1]	
	4.2	Height of mast, lowered	h1 (mm)	3736 [2]		3736 [2]		3736 [2]		3736 [2]	
	4.3	Free lift	h2 (mm)	150		150		150		150	
	4.4	Lift	h3 (mm)	4000		4000		4000		4000	
	4.5	Height of mast, extended	h4 (mm)	5661		5661		5661		5661	
	4.7	Height of overhead guard (cabin)	h6 (mm)	3035		3035		3035		3035	
	4.8	Height of seat/stand on platform	h7 (mm)	2004		2004		2004		2004	
	4.12	Towing coupling height	h10 (mm)	580		580		580		580	
	4.19	Overall length	l1 (mm)	6316		6516		7166		6984	
	4.20	Length to fork face	l2 (mm)	4916		5116		5366		4584	
	4.21	Overall width	b1/b2 (mm)	2565/2300		2565/2300		2565/2300		2565/2300	
	4.22	Fork dimensions	s/e/l (mm)	100 × 200 × 1400		100 × 200 × 1400		100 × 250 × 1800		100 × 200 × 2400	
	4.23	Fork carriage to ISO 2328, class/type A, B		Hyd Fork Posn.		Hyd Fork Posn.		Hyd Fork Posn.		Hyd Fork Posn.	
	4.24	Width of fork carriage	b3 (mm)	2545		2545		2545		2545	
	4.25	Fork spread	b5 (mm)	620/2220		620/2220		720/2290		620/2220	
	4.31	Ground clearance, below mast	m1 (mm)	200		200		200		200	
	4.32	Ground clearance, centre of wheelbase	m2 (mm)	376		376		376		376	
	4.35	Turning radius	Wa (mm)	4338		4512		4754		4102	
	4.36	Minimum pivoting point distance	b13 (mm)	1405		1405		1448		1362	
Performance	5.1	Travel speed, with/without load	(km/h)	28.1/30.1		28.1/29.8		25/25		28.8/30.1	
	5.2	Lifting speed, with/without load	(m/s)	0.37/0.42		0.37/0.4		0.37/0.4		0.37/0.4	
	5.3	Lowering speed, with/without load	(m/s)	0.45/0.4		0.42/0.38		0.42/0.38		0.42/0.38	
	5.5	Tractive force, with/without load	(N)	102700/105800		102600/105300		102100/105200		93500/95500	
	5.7	Climbing ability, with/without load	(%)	30.6/65.3		30.3/55.6		27.8/53.4		34.4/58.5	
	5.9	Acceleration time, with/without load	(s)	5.0/5.5		-		-		-	
	5.10	Service brake		Wet disc		Wet disc		Wet disc		Wet disc	
Drive	7.1	Engine manufacturer/type		Mercedes-Benz OM934	Cummins QSB 6.7	Mercedes-Benz OM934	Cummins QSB 6.7	Mercedes-Benz OM934	Cummins QSB 6.7	Mercedes-Benz OM934	Cummins QSB 6.7
	7.2	Engine performance according to ISO 1585	(kW)	150	129 kW (149 kW)	150	129 kW (149 kW)	150	129 kW (149 kW)	129	129 kW (149 kW)
	7.3	Rated speed	(1/min)	2200	2200	2200	2200	2200	2200	2200	2200
	7.4	Number of cylinders/displacement	(-/cm³)	4/5100	6/6700	4/5100	6/6700	4/5100	6/6700	4/5100	6/6700
	7.5	Fuel consumption according to VDI cycle	(l/h)	-	-	-	-	-	-	-	-
Others	8.1	Type of drive unit		Torque conv. 3/3		Torque conv. 3/3		Torque conv. 3/3		Torque conv. 3/3	
	10.1	Operating pressure for attachments	(bar)	250		250		250		250	
	10.2	Oil flow for attachments	(l/min)	5 – 130		5 – 130		5 – 130		5 – 130	
	10.7	Sound pressure level LpAZ (at the driver's seat)	(dB(A))	70		70		70		70	
	10.8	Towing coupling, design/type, DIN 15 170		Ø 50 mm		Ø 50 mm		Ø 50 mm		Ø 50 mm	

TECHNICAL DATA (According to VDI 2198)

Characteristics	1.1	Manufacturer		Linde		Linde		Linde		Linde	
	1.2	**Model**		**HT120 / 1200**		**HT140 / 1200**		**HT150 / 1200**		**HT160 / 1200**	
	1.2a	Series		1411-02		1411-02		1411-02		1411-02	
	1.3	Power unit		Diesel		Diesel		Diesel		Diesel	
	1.4	Operation		Seat		Seat		Seat		Seat	
	1.5	Load capacity / Load	Q (t)	12.0		14.0		15.0		16.0	
	1.6	Load centre distance	c (mm)	1200		1200		1200		1200	
	1.8	Axle centre to fork face	x (mm)	884		929		929		929	
	1.9	Wheelbase	y (mm)	3250		3250		3500		3500	
Weights	2.1	Service weight	(kg)	20725		22113		21981		22786	
	2.2	Axle load with load, front / rear	(kg)	30464 / 2261		33565 / 2548		34553 / 2428		36157 / 2629	
	2.3	Axle load without load, front / rear	(kg)	10769 / 9956		10394 / 11719		10429 / 11552		10424 / 12362	
Wheels / Tyres	3.1	Tyres rubber, SE, pneumatic, polyurethane		Pneumatic		Pneumatic		Pneumatic		Pneumatic	
	3.2	Tyre size, front		12.00 - 20 / 20 PR		12.00 - 20 / 20 PR		12.00 - 20 / 20 PR		12.00 - 20 / 20 PR	
	3.3	Tyre size, rear		12.00 - 20 / 20 PR		12.00 - 20 / 20 PR		12.00 - 20 / 20 PR		12.00 - 20 / 20 PR	
	3.5	Wheels, number front / rear (x = driven)		4x / 2		4x / 2		4x / 2		4x / 2	
	3.6	Track width, front	b10 (mm)	1874		1874		1874		1874	
	3.7	Track width, rear	b11 (mm)	1970		1970		1970		1970	
Dimensions	4.1	Mast / fork carriage tilt, forward / backward	a / b (°)	15.0 / 10.0 [1]		15.0 / 10.0 [1]		15.0 / 10.0 [1]		15.0 / 10.0 [1]	
	4.2	Height of mast, lowered	h1 (mm)	3736 [2]		3736 [2]		3736 [2]		3736 [2]	
	4.3	Free lift	h2 (mm)	150		150		150		150	
	4.4	Lift	h3 (mm)	4000		4000		4000		4000	
	4.5	Height of mast, extended	h4 (mm)	5661		5661		5661		5661	
	4.7	Height of overhead guard (cabin)	h6 (mm)	3035		3035		3035		3035	
	4.8	Height of seat / stand on platform	h7 (mm)	2004		2004		2004		2004	
	4.12	Towing coupling height	h10 (mm)	580		580		580		580	
	4.19	Overall length	l1 (mm)	7316		7516		7766		7766	
	4.20	Length to fork face	l2 (mm)	4916		5116		5366		5366	
	4.21	Overall width	b1 / b2 (mm)	2565 / 2300		2565 / 2300		2565 / 2300		2565 / 2300	
	4.22	Fork dimensions	s / e / l (mm)	100 × 200 × 2400		100 × 250 × 2400		100 × 250 × 2400		100 × 250 × 2400	
	4.23	Fork carriage to ISO 2328, class / type A, B		Hyd Fork Posn.		Hyd Fork Posn.		Hyd Fork Posn.		Hyd Fork Posn.	
	4.24	Width of fork carriage	b3 (mm)	2545		2545		2545		2545	
	4.25	Fork spread	b5 (mm)	620 / 2220		720 / 2290		720 / 2290		720 / 2290	
	4.31	Ground clearance, below mast	m1 (mm)	200		200		200		200	
	4.32	Ground clearance, centre of wheelbase	m2 (mm)	376		376		376		376	
	4.35	Turning radius	Wa (mm)	4338		4512		4754		4754	
	4.36	Minimum pivoting point distance	b13 (mm)	1405		1405		1448		1448	
Performance	5.1	Travel speed, with / without load	(km / h)	28.4 / 29.9		28.1 / 29.8		27.9 / 29.8		27.7 / 29.7	
	5.2	Lifting speed, with / without load	(m / s)	0.4 / 0.42		0.4 / 0.42		0.4 / 0.42		0.37 / 0.42	
	5.3	Lowering speed, with / without load	(m / s)	0.45 / 0.4		0.45 / 0.4		0.45 / 0.4		0.45 / 0.4	
	5.5	Tractive force, with / without load	(N)	92900 / 95200		102600 / 105300		102400 / 105400		102100 / 105200	
	5.7	Climbing ability, with / without load	(%)	30.2 / 53.0		30.3 / 55.6		29.4 / 56.0		27.8 / 53.4	
	5.9	Acceleration time, with / without load	(s)	-		-		-		-	
	5.10	Service brake		Wet disc		Wet disc		Wet disc		Wet disc	
Drive	7.1	Engine manufacturer / type		Mercedes-Benz OM934	Cummins QSB 6.7	Mercedes-Benz OM934	Cummins QSB 6.7	Mercedes-Benz OM934	Cummins QSB 6.7	Mercedes-Benz OM934	Cummins QSB 6.7
	7.2	Engine performance according to ISO 1585	(kW)	129	129 kW (149 kW)	150	129 kW (149 kW)	150	129 kW (149 kW)	150	129 kW (149 kW)
	7.3	Rated speed	(1 / min)	2200	2200	2200	2200	2200	2200	2200	2200
	7.4	Number of cylinders / displacement	(- / cm³)	4 / 5100	6 / 6700	4 / 5100	6 / 6700	4 / 5100	6 / 6700	4 / 5100	6 / 6700
	7.5	Fuel consumption according to VDI cycle	(l / h)	-	-	-	-	-	-	-	-
Others	8.1	Type of drive unit		Torque conv. 3 / 3		Torque conv. 3 / 3		Torque conv. 3 / 3		Torque conv. 3 / 3	
	10.1	Operating pressure for attachments	(bar)	250		250		250		250	
	10.2	Oil flow for attachments	(l / min)	5 – 130		5 – 130		5 – 130		5 – 130	
	10.7	Sound pressure level LpAZ (at the driver's seat)	(dB(A))	70		70		70		70	
	10.8	Towing coupling, design / type, DIN 15 170		Ø 50 mm		Ø 50 mm		Ø 50 mm		Ø 50 mm	

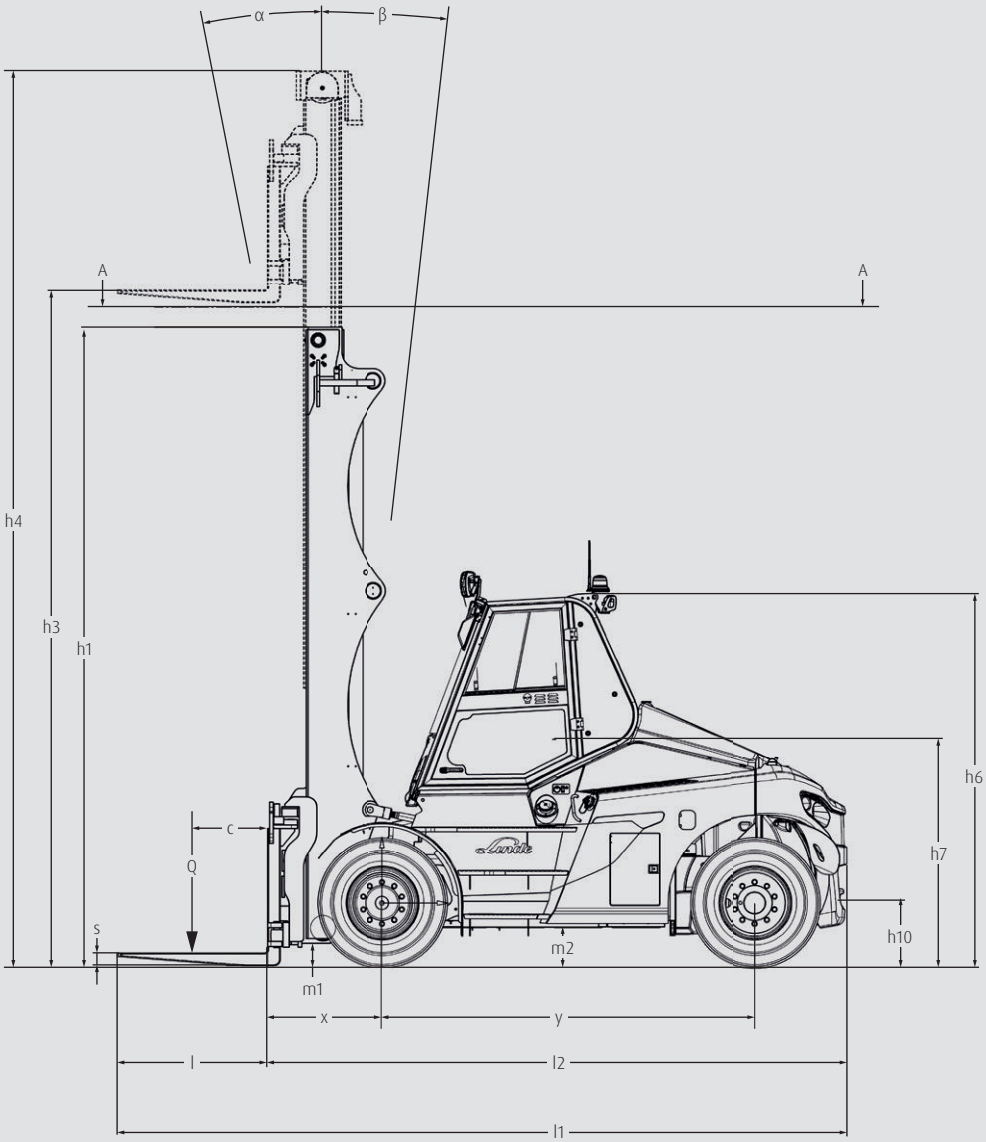
α
β
A
A
h4
h3
h1
h6
h7
h10
c
Q
s
m1
m2
x
y
l
l2
l1

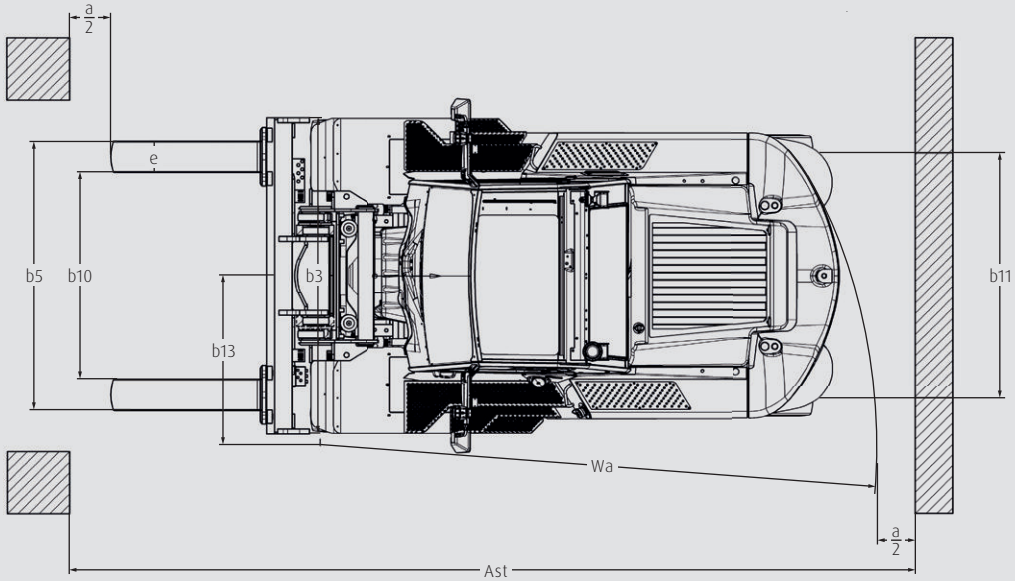
a/2
e
b5
b10
b3
b13
b11
Wa
a/2
Ast

MAST TABLES

STANDARD MAST (in mm)

Series	177						
Lift	h3: 3500	h3: 4000	h3: 4500	h3: 5000	h3: 5500	h3: 6000	h3: 6500
Height measurements	h1: 3080 h1#: 3155 h2: 150 h3+s: 3590 h4: 4830	h1: 3330 h1#: 3155 h2: 150 h3+s: 4090 h4: 5530	h1: 3580 h1#: 3655 h2: 150 h3+s: 4590 h4: 5830	h1: 3830 h1#: 3905 h2: 150 h3+s: 5090 h4: 6330	h1: 4080 h1#: 4155 h2: 150 h3+s: 5590 h4: 6830	h1: 4330 h1#: 4405 h2: 150 h3+s: 6090 h4: 7330	h1: 4580 h1#: 4655 h2: 150 h3+s: 6590 h4: 7830
Model							
HT100 / 600	○	○	○	○	○	○	○
HT120 / 600	○	○	○	○	○	○	○

Series	178							
Lift	h3: 3500	h3: 4000	h3: 4500	h3: 5000	h3: 5500	h3: 6000	h3: 6500	h3: 7000
Height measurements	h1: 3410 h1#: 3485 h2: 150 h3+s: 3600 h4: 5160	h1: 3660 h1#: 3736 h2: 150 h3+s: 4100 h4: 5661	h1: 3910 h1#: 3985 h2: 150 h3+s: 4600 h4: 6160	h1: 4160 h1#: 4235 h2: 150 h3+s: 5100 h4: 6600	h1: 4410 h1#: 4485 h2: 150 h3+s: 5600 h4: 7160	h1: 4660 h1#: 4735 h2: 150 h3+s: 6100 h4: 7660	h1: 4910 h1#: 4985 h2: 150 h3+s: 6600 h4: 8160	h1: 5160 h1#: 5235 h2: 150 h3+s: 7100 h4: 8660
Model								
HT100 / 1200	○	○	○	○	○	○	○	○
HT120 / 1200	○	○	○	○	○	○	○	○
HT140 / 600	○	○	○	○	○	○	○	○
HT150 / 600	○	○	○	○	○	○	○	○
HT160 / 600	○	○	○	○	○	○	○	○
HT180 / 600	○	○	○	○	○	○	○	○

Series	179							
Lift	h3: 3500	h3: 4000	h3: 4500	h3: 5000	h3: 5500	h3: 6000	h3: 6500	h3: 7000
Height measurements	h1: 3410 h1#: 3485 h2: 150 h3+s: 3600 h4: 5160	h1: 3660 h1#: 3736 h2: 150 h3+s: 4100 h4: 5661	h1: 3910 h1#: 3985 h2: 150 h3+s: 4600 h4: 6160	h1: 4160 h1#: 4235 h2: 150 h3+s: 5100 h4: 6600	h1: 4410 h1#: 4485 h2: 150 h3+s: 5600 h4: 7160	h1: 4660 h1#: 4735 h2: 150 h3+s: 6100 h4: 7660	h1: 4910 h1#: 4985 h2: 150 h3+s: 6600 h4: 8160	h1: 5160 h1#: 5235 h2: 150 h3+s: 7100 h4: 8660
Model								
HT140 / 1200	○	○	○	○	○	○	○	○
HT150 / 1200	○	○	○	○	○	○	○	○
HT160 / 1200	○	○	○	○	○	○	○	○
HT180 / 900	○	○	○	○	○	○	○	○

○ Optional equipment

h1: Height of mast, lowered
h3: Lift
h1#: Height of mast with free lift
h3 + s: Lift Height
h2: Free lift
h4: Height of mast, extended

STANDARD AND OPTIONAL EQUIPMENT

	Model / Equipment	HT100 – HT180
Safety	Audible warning reverse alarm (85 dB)	●
	Absent driver switch	●
	Reversing camera system and screen	○
Service	High-performance hydraulic filter preserving max. purity of oil for long life of all hydraulic components	●
	Chassis mounted hourmeter	●
	Centralized service box	●
Digitalisation	Connect Access Control PIN	○
	Connect Access Control RFID	○
	Connect Operating Hours	○
	Connect Trouble Codes	○
Operation / Load Handling	Single drive pedal with direction selector in armrest	●
	Electro-hydraulic forward tilting cabin	●
	Linde Load Control for low-effort precision of all mast functions	●
	Linde Load Weight Indicator (+ / - 1000 kg)	●
	Linde Load Weight Indicator (+ / - 100 kg)	○
	Demand-controlled hydrostatic power steering, fuel-economizing, easy and precise response	●
	Single control lever – Lift / tilt operation, variable position type	●
	Single control lever – Fork position operation, gated type	●
	Variable displacement piston pump	○
	Digital, proportional valve with integrated safety monitoring	●
Enviroment	Integral particulate filter (on EU V engines)	●
	Undertrays on chassis	●
	Engine air precleaner	○
Electronics	Battery isolator switch	●
	On-board battery charger	○
	Open cabin with armoured glass roof	●
	Cabin with front, top and rear washer / wipers with heater and right hand sliding window	○
	Sun blinds front and top screen	○
	Central 7" touch display including fuel gauge, clock, hour meter and servicing information for all important truck functions	●
	Buddy seat, PVC covered	○
	10° or 17° rotating driver's seat	○
	Seat incorporating air suspension with compressor	○
	Hydraulic-suspension comfort-class seat with wide range of adjustment	●
	Adjustable steering column	●
	Orange lap type seat belt	●
	External rear view mirrors	○
	Internal rear-view mirror	●
	Heater / Climate control	○
	Cabin pre-heater	○
	Digital audio broadcasting radio with MP3, USB, Bluetooth and speakers	○
	Radio with compact disc player and speakers	○
	USB charging port	●
	12 V socket in cabin	●
	Lockable, underseat storage box	●
	Armrest with storage box	●
	Cup holder	○
	Mud flaps	●
Mast	Standard masts, 2430 – 9500 mm lift height (model specific, refer to mast table)	○
	Duplex masts (full free lift), 2580 – 7000 mm lift height (model specific)	○
	Triplex masts (full free lift), 5500 – 7000 mm lift height (model specific)	○
	Mast accumulator	○
Attachment / Forks	Fork carriage, width b3 = 2545 mm	●
	Alternative carriage widths – 3000 mm, 3500 mm, 4000 mm, 4500 mm	○
	Manual fork carriage system	○
	Integral fork positioner	○
Axles and Tyres	Kessler D81 drive axle	●
	Trelleborg or similar premium tyres	●
Drive and Brake System	ZF 3 WG 161 / ZF 3 WG 171 ERGOPOWER SERIES (depending on the truck model)	●
	Engine intake air cleaner with integral safety element	●
Lighting	External step lighting	○
	Working lights LED	○
	Full road lighting	○
	Beacon lamps	○

● Standard equipment ○ Optional equipment

LOAD CAPACITY DIAGRAM

HT100 / 600

h3 (mm)	Q (kg)						
≤ 7000	10000	10000	9515	8980	8505	8075	7690
c (mm)	600	700	800	900	1000	1100	1200

HT120 / 600

h3 (mm)	Q (kg)						
7000	10800	10120	9520	8980	8510	8080	7690
6500	11400	10680	10050	9480	8980	8525	8115
≤ 6000	12000	11240	10575	9980	9450	8975	8540
c (mm)	600	700	800	900	1000	1100	1200

HT140 / 600

h3 (mm)	Q (kg)						
7000	12600	11820	11135	10525	9975	9480	9035
6500	13300	12480	11750	11110	10530	10010	9540
≤ 6000	14000	13135	12375	11690	11080	10535	10040
c (mm)	600	700	800	900	1000	1100	1200

HT150 / 600

h3 (mm)	Q (kg)						
7000	13500	12665	11910	11275	10685	10155	9680
6500	14250	13370	12595	11900	11280	10720	10215
≤ 6000	15000	14075	13255	12530	11875	11285	10755
c (mm)	600	700	800	900	1000	1100	1200

HT160 / 600

h3 (mm)	Q (kg)						
7000	14400	13510	12725	12025	11400	10835	10325
6500	15200	14260	13430	12695	12035	11435	10900
≤ 6000	16000	15015	14140	13360	12665	12040	11475
c (mm)	600	700	800	900	1000	1100	1200

HT180 / 600

h3 (mm)	Q (kg)						
7000	16200	15200	14315	13515	12830	12185	11615
6500	17100	16045	15115	14270	13540	12870	12255
≤ 6000	18000	16890	15910	15035	14255	13540	12905
c (mm)	600	700	800	900	1000	1100	1200

HT180 / 900

h3 (mm)	Q (kg)						
7000	16200	15355	14600	13915	13285	12715	12185
6500	17100	16215	15415	14685	14030	13430	12870
≤ 6000	18000	17065	16220	15465	14765	14135	13550
c (mm)	900	1000	1100	1200	1300	1400	1500

HT100 / 1200

h3 (mm)	Q (kg)						
7000	9000	8595	8220	7875	7560	7275	7015
6500	9500	9100	8725	8365	8025	7710	7405
≤ 6000	10000	9585	9190	8815	9455	9115	7795
c (mm)	1200	1300	1400	1500	1600	1700	1800

HT120 / 1200

h3 (mm)	Q (kg)						
7000	10800	10315	9870	9460	9085	8740	8420
6500	11400	10885	10415	9985	9590	9225	8885
≤ 6000	12000	11460	10965	10515	10095	9710	9355
c (mm)	1200	1300	1400	1500	1600	1700	1800

HT140 / 1200

h3 (mm)	Q (kg)						
7000	12600	12045	11535	11065	10635	10235	9860
6500	13300	12710	12175	11680	11225	10800	10410
≤ 6000	14000	13380	12815	12295	11815	11375	10960
c (mm)	1200	1300	1400	1500	1600	1700	1800

HT150 / 1200

h3 (mm)	Q (kg)						
7000	13500	12860	12310	11830	11420	11060	10750
6500	14250	13575	13000	12500	12060	11680	11375
≤ 6000	15000	14300	13700	13165	12715	12325	12000
c (mm)	1200	1300	1400	1500	1600	1700	1800

HT160 / 1200

h3 (mm)	Q (kg)						
9500	10400	9775	9220	8725	8285	7880	7515
7000	13300	12710	12175	11680	11225	10800	10410
6500	15200	14285	13475	12750	12100	11515	10985
≤ 6000	16000	15040	14175	13425	12740	12120	11560
c (mm)	1200	1300	1400	1500	1600	1700	1800

CHARACTERISTICS

Armoured glass roof

Safety

→ Armored glass roof provides a clear view of the lifted load
→ Visually optimized counterweight reduces blind spot
→ Optimized design ensures a clear field of vision in all directions
→ Large cabin doors offer almost complete all-round visibility
→ A loud signal tone warns the surrounding area when reversing

Spacious driver's cab

Ergonomics

→ Visually optimized design avoids unnecessary body movements
→ Spacious driver's cab offers ample freedom of movement
→ Adjustable armrests and steering column ensure comfortable working posture
→ Easily accessible controls enable comfortable seating position
→ Hydraulically suspended seat reduces physical strain
→ Suspended driver's cab protects against shocks and vibrations

Linde Load Control and steering wheel

Handling

→ Precise and fast handling increases throughput
→ Efficient diesel engine reduces fuel consumption and exhaust emissions
→ Linde Load Control provides maximum control over all mast functions
→ Highly responsive hydrostatic power steering

Engine access through tiltable cabin

Service

→ Robust motor ensures service intervals – of up to 1000 hours
→ Linde Service Monitoring System determines oil change interval
→ Double-sided service access accelerates repair work

Subject to modification in the interest of progress. Illustrations and technical details could include options and not binding for actual constructions. All dimensions subject to usual tolerances.

TOTAL WAREHOUSE
TotalWarehouse.com
833-868-2500