# Standard Equipment/Optional Equipment

## Standard Equipment

Modular designed truck for perfect customization
Navigation module on a robust frame with lighting signals, control panel, touch screen, communication module, navigation laser (horizontal and vertical)
Front & rear safety scanner
2D curtain laser
Traction/steering & lifting software management
Robot Manager
Rack Editor
L Head forks
Redundant traction-motor for K-MATIC
Automatic fork cyclus
Overreach of forks
LSC with weight and load recognition, load sensor or weight and load recognition
Synchronized lowering
Energy recovery when braking or lowering the cabin

## Optional Equipment

Side Safety Sensor (left and right) for aisle changes
Standard masts available up to 12m
Triplex masts available up to 12m. Higher masts available on request
Different battery (compartment) sizes
Battery roller for lateral change
Battery carrier
Electrical verification for battery lock
Side covering for battery
Antistatic guide rollers
Hydraulic oil filling assistance

# Robotic very narrow aisle truck
# Capacity up to 1500 kg
# K-MATIC

Series 011

Linde Material Handling

## Safety

Thanks to its smart safety management, the K-MATIC anticipates and reacts autonomously to its direct environment. Due to the robotic usage there are less rack and pallet damages. Therefore the K-MATIC is ideal, if high value goods are handled and damage costs are causing problems.

## Performance

The unique infrastructure-free geoguidance system provides gently aisle changes when recommended by the supervisor. The supervisor is interacting with the WMS/ERP. The in the supply chain flow installed K-MATIC interacts with customer's environment (conveyers, PND stations...) to ensure an optimized and steady process.

## Comfort

The K-MATIC is natively designed to work in a shared environment (people and trucks). The user-friendly interface provides all needed controls & information at a glance. Moreover, the dual driving mode makes the K-MATIC intuitive to switch automatic and manual modes.

## Reliability

Fully integrated in the warehouse product range, the K-MATIC benefits from all Linde quality standards, and the robust "DRIVEN BY BALYO" navigation technology. Always available, the K-MATIC supports your business 24/7 while offering significant costs-savings.

## Productivity

Efficiency at work, efficiency in servicing.
With a computerized & remote diagnostic system, combined with predictive maintenance program, the K-MATIC remains available at any time.

# Features

**Driving system**
- Standard truck converted into a robotic truck
- Dual driving mode - automatic/manual
- Navigation laser (horizontal and vertical), safety laser (front & rear), optional on side for aisle changes
- Embedded computer, emergency stop buttons, light and sound warning indicators

**Geoguidance Navigation**
- Innovative infrastructure-free technology (no reflector)
- Relies on existing structural features (racks, walls, columns...)
- Real time mapping and localization
- Seamless integration in existing layouts, gradual extension or global deployment

**Smart Safety**
- Real time speed-adaptive detection fields
- Unique dynamic cornering detection fields
- Autonomous decision-making capability with 2D lidar camera
- Natural cohabitation with operators and other trucks
- Pallets or obstacles detection thanks to the rear laser scanner

**User interface**
- 7" LCD touch screen
- Robotic truck, battery and system status
- Real time task management and report
- Intuitive path localization
- Service mode with PIN access
- Log extraction via USB

**Operations management**
- 3D pallet detection
- Pallet distance detection control
- Smart traffic via Robot Manager (Supervisor software)
- Task management with WMS/ERP interface
- Rack editor

Subject to modification in the interest of progress. Illustrations and technical details could include options and not binding for actual constructions. All dimensions subject to usual tolerances.

**Linde Material Handling GmbH**, Postfach 100136, 63701 Aschaffenburg, Germany
Phone +49.6021.99-0, Fax +49.6021.99-1570, www.linde-mh.com, info@linde-mh.com

Linde Material Handling

Printed in Germany 159.e.0.5.1216.IndA.Ki

# Technical Data according to VDI 2198

| | | | | | | |
|---|---|---|---|---|---|---|
| Characteristics | 1.1 | Manufacturer | | LINDE | LINDE | LINDE |
| | 1.2 | Manufacturer's type designition | | **K-MATIC Example 0.7** | **K-MATIC Example 1.0** | **K-MATIC Example 1.5** |
| | 1.2a | Series | | 011 | 011 | 011 |
| | 1.3 | Power unit | | Battery | Battery | Battery |
| | 1.4 | Operation | | Stand/Sitz | Stand/Sitz | Stand/Sitz |
| | 1.5 | Load capacity/Load | Q (t) | 0.7 [1] | 1.0 [1] | 1.5 [1] |
| | 1.6 | Load centre distance | c (mm) | 600 | 600 | 600 |
| | 1.9 | Wheelbase | y (mm) | 1586 | 1874 | 2108 |
| Weights | 2.1 | Service weight | (kg) | 7163 [2] | 8801 [2] | 10625 [2] |
| | 2.2 | Axle load with load, front/rear | (kg) | 2251 / 5612 | 2963 / 6838 | 3503 / 8622 |
| | 2.3 | Axle load without load, front/rear | (kg) | 2692 / 4471 | 3496 / 5305 | 4214 / 6411 |
| Wheels/Tyres | 3.1 | Tyres rubber, SE, pneumatic, polyurethane | | Vulkollan | Vulkollan | Vulkollan |
| | 3.2 | Tyre size, front | | Ø 406 x 170 | Ø 406 x 170 | Ø 406 x 170 |
| | 3.3 | Tyre size, rear | | Ø 370 x 160 | Ø 370 x 160 | Ø 370 x 160 |
| | 3.5 | Wheels, number front/rear (x = driven) | | 1x / 2 | 1x / 2 | 1x / 2 |
| | 3.6 | Track width, front | b10 (mm) | 1490 | 1540 | 1540 |
| | 3.7 | Track width, rear | b11 (mm) | 0 | 0 | 0 |
| Dimensions | 4.2 | Height of mast, lowered | h1 (mm) | 2900 | 4900 | 6900 |
| | 4.4 | Lift | h3 (mm) | 3200 | 7200 | 10800 |
| | 4.5 | Height of mast, extended | h4 (mm) | 5755 | 9755 | 13355 |
| | 4.7 | Height of overhead guard (cabin) | h6 (mm) | 2555 | 2555 | 2555 |
| | 4.8 | Height of seat/stand on platform | h7 (mm) | 460 | 460 | 460 |
| | 4.11 | Supplementary lift | h9 (mm) | 755 + 920 | 755 + 920 | 755 + 920 |
| | 4.14 | Platform height, raised | h12 (mm) | 3660 [3] | 7660 [3] | 11260 [3] |
| | 4.15 | Height, lowered | h13 (mm) | 60 | 60 | 60 |
| | 4.19 | Overall length | l1 (mm) | 3206 + 200 | 3494 + 200 | 3728 + 200 |
| | 4.21 | Overall width | b1/b2 (mm) | 1160 / 1700 [4] | 1160 / 1750 [4] | 1160 / 1750 [4] |
| | 4.22 | Fork dimensions DIN ISO 2331 | s/e/l (mm) | 50 x 120 x 1200 | 50 x 120 x 1200 | 50 x 120 x 1200 |
| | 4.24 | Width of fork carriage | b3 (mm) | 710 | 710 | 710 |
| | 4.25 | Fork spread | b5 (mm) | 470 / 640 | 470 / 640 | 470 / 640 |
| | 4.27 | Width over side guide rollers | b6 (mm) | 1825 | 1845 | 1865 |
| | 4.29 | Reach, lateral | b7 (mm) | 1500 | 1495 | 1480 |
| | 4.31 | Ground clearance, below mast | m1 (mm) | 40 | 40 | 40 |
| | 4.32 | Ground clearance, centre of wheelbase | m2 (mm) | 87 | 87 | 87 |
| | 4.34a | Aisle width, travelling | Ast (mm) | 1830 | 1850 | 1870 |
| | 4.35 | Turning radius | Wa (mm) | 2052 | 2340 | 2574 |
| | 4.38 | Centre of axle to fork pivot | l8 (mm) | 999 | 999 | 999 |
| | 4.39 | Head centre | A (mm) | 480 | 480 | 480 |
| | 4.40 | Width of reach carriage | B (mm) | 1650 | 1620 | 1590 |
| | 4.41 | Head width | F (mm) | 240 | 240 | 250 |
| | 4.42 | End aisle width, with/without load | Au (mm) | 3625 | 3913 | 4150 |
| Performance | 5.1 | Travel speed, with/without load | (km/h) | 10.5 / 10.5 | 12 / 12 | 12 / 12 |
| | 5.2 | Lifting speed, with/without load | (m/s) | 0.46 / 0.47 | 0.6 / 0.6 | 0.39 / 0.39 |
| | 5.3 | Lowering speed, with/without load | (m/s) | 0.45 / 0.45 | 0.45 / 0.45 | 0.43 / 0.43 |
| | 5.4 | Reach speed, with/without load | (m/s) | 0.3 / 0.45 | 0.3 / 0.45 | 0.3 / 0.45 |
| | 5.9 | Acceleration time, with/without load | (s) | 6.0 / 6.0 | 6.0 / 6.0 | 7.0 / 6.0 |
| | 5.10 | Service brake | | Regenerative | Regenerative | Regenerative |
| Drive | 6.1 | Drive motor rating S2 60 min | (kW) | 7 | 7 | 7 |
| | 6.2 | Lift motor rating at S3 15% | (kW) | 20 | 24 | 24 |
| | 6.3 | Battery according to DIN 43531/35/36 A,B,C,no | | 43 536 / A | 43 536 / A | 43 536 / A |
| | 6.4 | Battery voltage/rated capacity (5h) | (V)/(Ah) | 80 / 465 | 80 / 775 | 80 / 930 |
| | 6.5 | Battery weight (± 5%) | (kg) | 1238 | 1863 | 2178 |
| | 8.1 | Type of drive unit | | Microprocessor | Microprocessor | Microprocessor |
| | 10.7 | Sound pressure level LpAZ (at the driver's seat) | (dB(A)) | 68 | 68 | 68 |
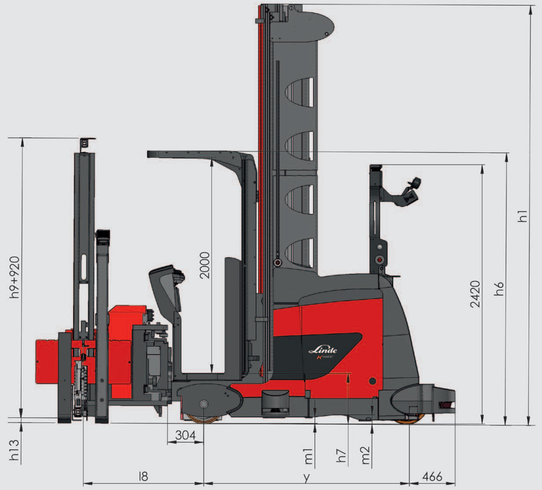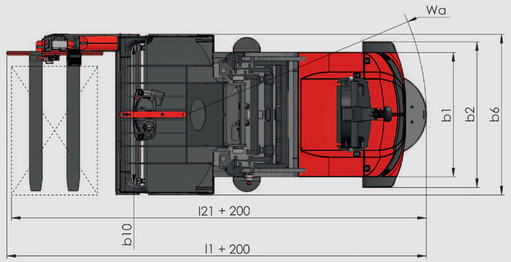
1) Delta Q = 100 kg; from 500-1500 kg with L-Head model.
2) Figures with battery, see line 6.4/6.5.
3) Picking height = h12 + 1600 mm = h28
4) Step for b2; 50 mm from 1160 - 1800 mm